do My BesT, to be the best!

MIBET ENERGY

MRac Ground Solar PV Mounting System GT7

Overview

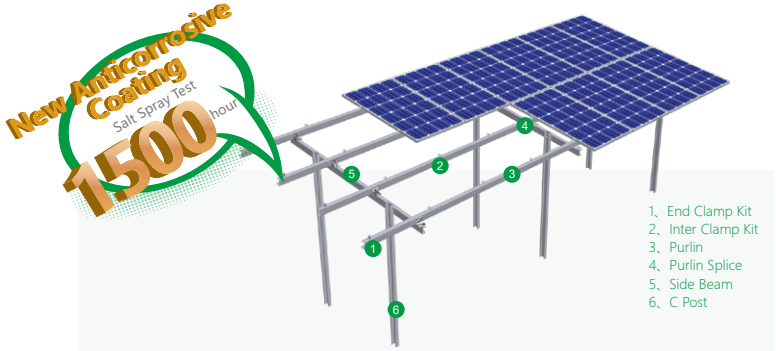

MRac Ground Solar PV Mounting System GT7 is applied for the installation of large-scale and utility-scale solar PV power plant. Main components are made of hot-dip galvanized steel, with good performance of structure strength, stability, and anti-corrosion. Compatible with varied solar modules. Unique piles and structure design save installation time and cost.



Mounting Structure

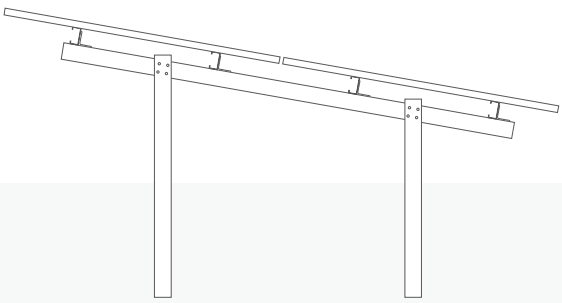

GT7 Mounting Structure

Features

- Unique Pile Design
  Unique post design suitable for varied soil conditions and strengthen the whole structure stability.
- Pre-assembled Components Save Onsite Installation Time
  Solution design case by case, most components pre-assembled in factory, no onsite cut and drill request, saving the onsite installation time and cost.
- Flexibility and Adjustability
  The structure can be adjusted with some tolerance with east-west, west-south and south-north directions, assuring flexible on-site installation to achieve best yield for solar modules.
- Compatible to Varied Solar Modules
  With MRac module clamps, the system compatible with most kinds of framed 60-cell, 72-cell, half-cut cells modules and frameless modules.

Technical Parameter

Installation Site	Ground	Design Standard	AS/NZS 1170，DIN 1055，JIS C8955：2017，
Foundation	C-shape, I-shape, U-shape Piles		International Building Code IBC 2009,
Tilt Angle	0-60°		California Building Code CBC 2010；
Wind Load	60m/s	Material	Magnelis or Zinc-Aluminum-Magnesium
Snow Load	1.6KN/㎡	Fastener	SUS304 & Galvanizing
Ground Clearance	500-2000mm	Clamps	AL6005-T5(Anodized)
Applicable Solar Module	Framed or Frameless	Color	Silver or Customized
Panel Layout	Portrait or Landscape	Warranty	10-Year Warranty

Certified by TUV, SGS and qualified consultants in AU, JP, ASEAN, CN, UK, EU, US

Components



End Clamp Kit



Inter Clamp Kit



Purlin

Material：ZAM



Beam Connector

Material：ZAM



Pile

Material：ZAM



C-shape Pile

Material：ZAM

迈贝特（厦门）新能源有限公司 XIAMEN MIBET NEW ENERGY CO.,LTD.

选择绿色 选择迈贝特 | do My BesT , to be the best!

TEL: +86 592 3754999 • FAX: +86 592 6771575 • E-mail: sales@mbt-energy.com • www.mbt-energy.com • Add: No.45, Sushan Road, Jimei District, Xiamen, Fujian, China